THE TRADER® RANGE

BENCE Plumbing | Heating | Bathrooms

TRADER DEALS

1ST APRIL - 30TH JUNE 2021

VOL.1

A7256AA

IDEAL STANDARD ECOTHERM SHOWER PACK

- 600MM RISER RAIL
- 1.35M HOSE
- CHROME PLATED FINISH

£89.26

H2D3CS

ROMAN STANDARD BATH SCREEN

- (H)1360 X (W)820MM GLASS:5MM
- FRAMELESS WITH RADIUS GLASS
- LEFT & RIGHT HAND FIXING
- ROTATES 180° FOR ACCESS

£63.62

V10SP913S

ROMAN 900 WET ROOM PANEL

- (H)2000 X (W)850MM GLASS:10MM
- +/- 7.5MM OF ADJUSTMENT

£178.20

LBBK90

ROMAN BRACE KIT

- BRACING FOR BACK TO WALL FIX ONLY

£56.08

B1958AA (1TH) // **B1152AA** (2TH)

IDEAL STANDARD CALISTA BATH SHOWER MIXER

- COMPLETE WITH SHOWER KIT
- DUAL LEVER HANDLE DESIGN
- CHROME PLATED FINISH

1 TAP HOLE **£62.80**

2 TAP HOLE **£65.55**

IMAGES SHOWS 2 TAP HOLE

H4D12CSL (LEFT) // **H4D12CSR** (RIGHT)

ROMAN HINGED BATH SCREEN

- (H)1500 X (W)835MM GLASS:8MM
- OUTWARD OPENING
- LEFT OR RIGHT HANDING MUST BE SPECIFIED
- SUITABLE FOR POWER SHOWERS
- UNIQUE SEALING SYSTEM

£107.26

ALL PRICES EX. VAT AND ARE CORRECT AT TIME OF PRINT. ALL OFFERS ARE WHILE STOCKS LAST. ALL PRICES ARE SUBJECT TO CHANGE. SUBSTITUTION DEALS MAY BE AVAILABLE.

BENCE PLUMBING & HEATING,
UNIT 2 MANOR ROAD, MACKENZIE WAY, CHELTENHAM GL51 9TX
01242 325345
WWW.BENCEPLUMBING.CO.UK

BENCE
Plumbing | Heating | Bathrooms

FLOSC250

FLOPLAST SC250 SOLVENT CEMENT 250ML

£3.28

AV110W (WHITE) // AV110G (GREY) // AV110B (BLACK)

FLOPLAST 110MM AIR ADMITTANCE VALVE SOLVENT

WHITE **£11.39** | GREY **£11.98** | BLACK **£10.76**

606-1001

ALTECNIC FAST FIT SHOWER CONNECTIONS (PAIR)

£8.75

PV016C

ALTECNIC 0.16LTR MINI POTABLE EXPANSION VESSEL SHOCK ARRESTOR 3.5BAR

£16.98

ALT-ST0035

ALTECNIC FILLING LOOP WITH PRESSURE GAUGE

£15.00

MCM22001

ADEY MAGNACLEAN MICRO BOILER FILTER

£43.50

1000003515

ROTHENBERGER TOTEBAG SOLDER SET 1

SUPER FIRE 2 TORCH, 15MM PIPE SLICE & 22MM PIPE SLICE, SOLDER MAT

£104.37

1000003516

ROTHENBERGER TOTEBAG SOLDER SET 2

SUPER FIRE 2 TORCH, 2X PROPANE GAS, SOLDER MAT

£99.58

STR2 1.5C (1.5C) // STR2 2.0C (2.0C)

GRUNDFOS NIAGARA SHOWER PUMP

1.5C **£91.22** | 2.0C **£112.47**

UPS3

GRUNDFOS UPS3 PUMP

£90.12

SI-CALLYTIC-15

CALMAG 15MM ELECTROLYTIC SCALE INHIBITOR

£26.67

CHEM-CAL-SAN-250 (GEL) // CHEM-CAL-SAN-250-LIQ (LIQUID)

CALMAG 250ML HAND SANITISER GEL OR LIQUID

GEL **£2.93** | LIQUID **£3.94**

ALL PRICES EX. VAT AND ARE CORRECT AT TIME OF PRINT. ALL OFFERS ARE WHILE STOCKS LAST. ALL PRICES ARE SUBJECT TO CHANGE. SUBSTITUTION DEALS MAY BE AVAILABLE.

wirquin

30120520

WIRQUIN NANO 6.7 BASIN WASTE & TRAP, CHROME

- ULTRA COMPACT (SMALLEST IN THE MARKET)
- EASY TO CLEAN
- 5 YEAR GUARANTEE
- MORE SPACE UNDER THE BASIN

£18.24

30120584

WIRQUIN NANO 6.7 BASIN WASTE & TRAP, MATT BLACK

- ULTRA COMPACT (SMALLEST IN THE MARKET)
- EASY TO CLEAN
- 5 YEAR GUARANTEE
- MORE SPACE UNDER THE BASIN

£19.32

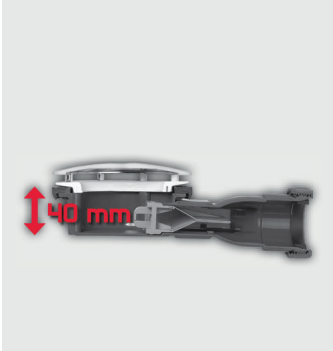

30120015

WIRQUIN SLIM SHOWER WASTE ABS DOME

- SLIMMEST WASTE ON THE MARKET
- UNIVERSAL OUTLET
- 5 YEAR GUARANTEE
- HIGH FLOW RATE (FOR SHALLOW TRAYS)

£16.38

30722169

WIRQUIN 1¼" NEO AIR TELESCOPIC BOTTLE TRAP

- GUARANTEED ZERO LEAKS
- QUICK TO INSTALL
- LIFETIME GUARANTEE
- SLIM FIT FOR THE TIGHTEST SPACES

£5.39

joule
manufacturing excellence

CYCLONE

JOULE CYLINDER

PRODUCT	SPECIFICATION	MODEL CODE	PRICE
125L CYCLONE IND STANDARD B	INDIRECT	TCEMVI-0125LFB	£390.26
150L CYCLONE IND STANDARD B	INDIRECT	TCEMVI-0150LFB	£384.62
170L CYCLONE IND STANDARD B	INDIRECT	TCEMVI-0170LFB	£412.46
200L CYCLONE IND STANDARD C	INDIRECT	TCEMVI-0200LFC	£460.35
250L CYCLONE IND STANDARD C	INDIRECT	TCEMVI-0250LFC	£507.83
300L CYCLONE IND SHORT (600) C	INDIRECT	TCEMVI-0300NFC	£567.56
125L CYCLONE DIR STANDARD B	DIRECT	TCEMVD-0125LFD	£390.26
150L CYCLONE DIR STANDARD B	DIRECT	TCEMVD-0150LFD	£403.38
170L CYCLONE DIR STANDARD C	DIRECT	TCEMVD-0170LFD	£399.26
200L CYCLONE DIR SMART STANDARD C	DIRECT	TCEMVD-0200LFC	£430.78
250L CYCLONE DIR SMART STANDARD C	DIRECT	TCEMVD-0250LFC	£487.53
300L CYCLONE DIR SMART SHORT (600) C	DIRECT	TCEMVD-0300NFC	£606.33
100L CYCLONE IND SLIM C	INDIRECT SLIM	TCEMVI-0100SFC	£617.27
120L CYCLONE IND SLIM C	INDIRECT SLIM	TCEMVI-0125SFC	£524.70
150L CYCLONE IND SLIM C	INDIRECT SLIM	TCEMVI-0150SFC	£544.87
175L CYCLONE IND SLIM C	INDIRECT SLIM	TCEMVI-0170SFC	£554.03
205L CYCLONE IND SLIM C	INDIRECT SLIM	TCEMVI-0200SFC	£572.34
100L CYCLONE DIR SLIM B	DIRECT SLIM	TCEMVD-0100SFD	£539.95
120L CYCLONE DIR SLIM B	DIRECT SLIM	TCEMVD-0125SFD	£475.20
150L CYCLONE DIR SLIM B	DIRECT SLIM	TCEMVD-0150SFD	£537.03
170L CYCLONE DIR SLIM C	DIRECT SLIM	TCEMVD-0170SFD	£565.60
205L CYCLONE DIR SLIM C	DIRECT SLIM	TCEMVD-0200SFC	£598.46

ALL PRICES EX. VAT AND ARE CORRECT AT TIME OF PRINT. ALL OFFERS ARE WHILE STOCKS LAST. ALL PRICES ARE SUBJECT TO CHANGE. SUBSTITUTION DEALS MAY BE AVAILABLE.

B1151AA

IDEAL STANDARD CALISTA TWO TAPHOLE DECK MOUNTED DUAL CONTROL BATH FILLER

£54.86

IMAGE SHOWS MIXER WITH PUW

B1149AA/NO PUW // B1148AA/WITH PUW

IDEAL STANDARD CALISTA SINGLE LEVER BASIN MIXER

NO PUW £38.86 | WITH PUW £45.82

KARTELL UK

BFSTR512C

KARTELL CHROME TOWEL RAIL 500 X 1200MM

- 22MM RAILS
- VALVES NOT INCLUDED

£35.82

STR512B

KARTELL BLACK TOWEL RAIL 500 X 1200MM

- 22MM RAILS
- VALVES NOT INCLUDED

£41.66

VADO

BOK-189-CP

VADO AXCES BOX 5 ACCESSORY PACK

£49.36

SIR-189-CP

VADO AXCES SIRKEL 5 ACCESSORY PACK

£49.36

ALL PRICES EX. VAT AND ARE CORRECT AT TIME OF PRINT. ALL OFFERS ARE WHILE STOCKS LAST. ALL PRICES ARE SUBJECT TO CHANGE. SUBSTITUTION DEALS MAY BE AVAILABLE.

LANZA-BASIN

SCUDO LANZA BASIN

- 1 TAP HOLE OPTION ONLY
- CERAMIC BASIN CAN BE TURNED TO USE TAP ON THE LEFT OR RIGHT

£18.33

TAP NOT INCLUDED

LANZA-FLOOR

SCUDO LANZA FLOOR UNIT

- 18MM SOLID CARCASS
- SOFT CLOSE DOOR
- DOOR OPENING LEFT OR RIGHT

£54.90

TAP NOT INCLUDED

LANZA-500-BASINUNIT

SCUDO LANZA 500 BASIN UNIT

- 18MM SOLID CARCASS
- SOFT CLOSE DOORS

£59.16

LANZA-500-WC-UNIT

SCUDO LANZA 500 WC UNIT

- 18MM SOLID CARCASS

£69.54

LANZA-550-BASINCER

SCUDO LANZA 550 BASIN

- CERAMIC BASIN
- 1 TAP HOLE OPTION ONLY

£41.89

CISTERN002

SCUDO LANZA CONCEALED CISTERN

- (D)140 X (W)340MM
- WRAS APPROVED FLUSH VALVE
- AG AIR GAP COMPLIANT
- TOP AND FRONT ACCESS

£21.63

ALL PRICES EX. VAT AND ARE CORRECT AT TIME OF PRINT. ALL OFFERS ARE WHILE STOCKS LAST. ALL PRICES ARE SUBJECT TO CHANGE. SUBSTITUTION DEALS MAY BE AVAILABLE.

Z34965H000

ROCA HAVANA WC PICK-UP PACK

£74.16

IMAGE SHOWS 1 TAPHOLE BASIN

Z34865H001/(1TH) // Z34866H002/(2TH)

ROCA BASIN & PEDESTAL PICK-UP PACK

1 TAP HOLE £47.90 | 2 TAP HOLE £47.90

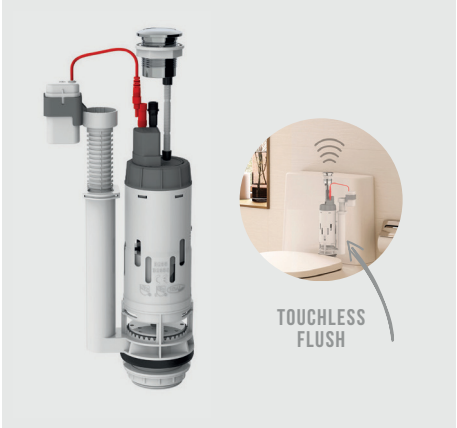

A822599900

ROCA TOUCHLESS FLUSH

£55.18

U349801

IDEAL STANDARD BARI BASIN PACK

£63.40

U349701

IDEAL STANDARD BARI WC PACK

£103.75

Multikwik®

MKS2

MULTIKWIK PAN CONNECTOR

£6.93

MKB2190

MULTIKWIK PAN CONNECTOR

£7.43

PWM040

MULTIKWIK UTILITY COMPACT TEE

£6.63

B032/32MM Ø // B040/40MM Ø

MULTIKWIK BOTTLE TRAP

32MM £4.19 | 40MM £6.24

ALL PRICES EX. VAT AND ARE CORRECT AT TIME OF PRINT. ALL OFFERS ARE WHILE STOCKS LAST. ALL PRICES ARE SUBJECT TO CHANGE. SUBSTITUTION DEALS MAY BE AVAILABLE.